Installation Handbook DeltaV-Seal™ 316L

Contents

Scope 2
Installation Procedure 3
Table 3 – EN PN10 Torque Table 9
Table 4 – EN PN10 Installation Forces (corresponding to Table 3) 10
Table 5 – EN PN16 Torque Table 11
Table 6 – EN PN16 Installation Forces (corresponding to Table 5) 12
Table 7 – EN PN25 Torque Table 13
Table 8 – EN PN25 Installation Forces (corresponding to Table 7) 14
Table 9 – EN PN10-40 Torque Table 15
Table 10 – EN PN10-40 Installation Forces (corresponding to Table 9) 16
Table 11 – EN PN10-16 Torque Table 17
Table 12 – EN PN10-16 Installation Forces (corresponding to Table 11) 18
Table 13 – EN PN25-40 Torque Table 19
Table 14 – EN PN25-40 Installation Forces (corresponding to Table 13) 20
Table 15 – EN PN63-160 Torque Table 21
Table 16 – EN PN63-160 Installation Forces (corresponding to Table 15) 22
Notes to Installation Procedure 23

Scope

- DeltaV-Seal ASTM A240; UNS Designation S31603; Type 316L Standard Products
- EN 1092-1 EN 10222-5 1.4404 Flanges
- DN200-DN600 PN10
- DN200-DN400 PN16
- DN200-DN350 PN25
- DN10-DN80 PN10-40
- DN100-DN150 PN10-16
- DN100-DN150 PN25-40
- DN25 PN 63-160

Installation Procedure

Gasket installation shall always be conducted by qualified personnel, according to EN 1591-4 or equivalent.

1. Check that the flanges are made of UNS Designation S31603; Type 316L stainless steel and marked with correct size and pressure class. Ensure that the pipe schedule is SCH 40S.
2. Check the flanges for damage and ensure that no defects are outside of the tolerances as defined for 'Hard-Faced Gaskets' in ASME PCC-01–2022 Appendix D. Repair or replace if necessary.
3. Clean all contact surfaces and clear for impurities and debris. Use a wire brush and a rag with solvent.
4. Check to verify that the bolts are the correct quality made of material grade 42CrMo4 - 1.7225 +QT, in accordance with EN 10269, unless otherwise specified, refer to Table 3-16.
5. Grease bolts sufficiently with Molykote® G-Rapid Plus so that all threads and contact surfaces between nuts and flanges are covered with lubricant as shown in Figure 1.

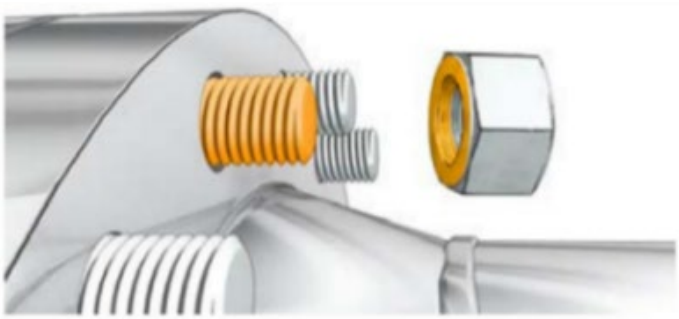

Figure 1: Lubrication (also refer to Note 3)

6. Before installation of the DeltaV-Seal, the flange joint alignment shall be verified. The following four verification methods and tolerances shall be applied:

   - Centreline (CL) tolerance shall be measured at four locations, each approximately 90° apart on the flange. Hold a straight edge parallel to the axis of one flange and flush with the outside diameter (O.D.). Extend the straight edge to the adjoining flange and measure the distance from the straight edge surface to the same surface on the adjoining flange, see Figure 2.

   - Gap (GP) tolerance is a measurement of the spacing between the seating surfaces, see Figure 3.

   - Parallelism (PRL) tolerance is a measurement defining the uniformity of distance between the sealing surfaces of two flange faces. PRL tolerance shall be calculated as the difference between the largest and smallest distance between the two sealing surfaces at the sealing surface O.D., see Figure 4.

- Rotational two-hole (RTH) ensures that the flange holes are rotationally aligned to one another such that the fasteners can be installed perpendicular to both flanges. Measure RTH by confirming that the hole centres are aligned, see Figure 5.

Figure E-2-1
Centerline High/Low

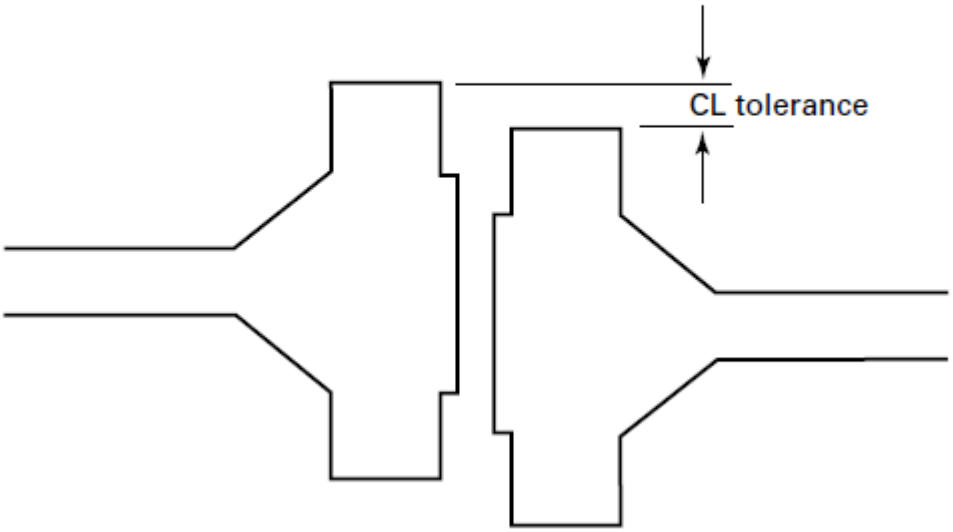

Figure 2

Figure E-2-2
Excessive Spacing Gap

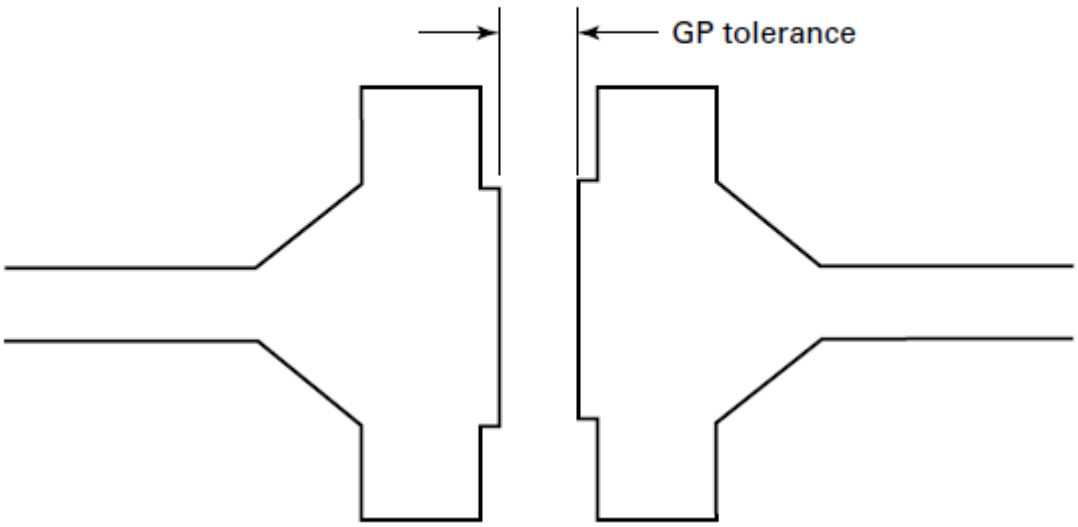

Figure 3

Figure E-2-3
Parallelism

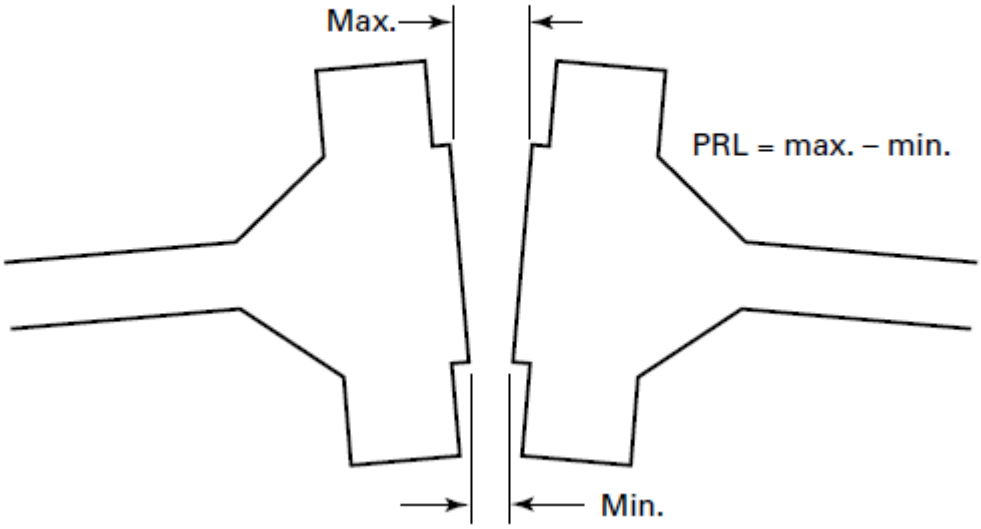

Figure 4

Figure E-2-4
Rotational Two-Hole

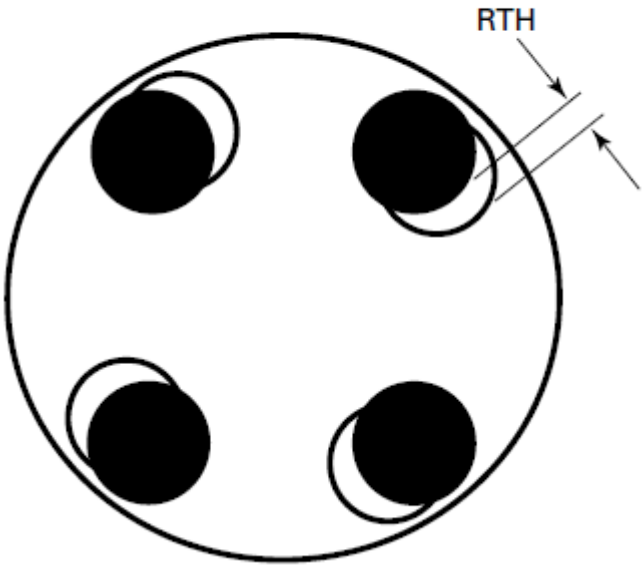

Figure 5

The alignment tolerances shall comply with Table 1.

Table E-2-1	
Flange Alignment Tolerances	
Property	Maximum Tolerance, mm (in.)
CL	1.5 ($^{1}/_{16}$)
GP	7.6 ($^{1}/_{4}$)
PRL	0.8 ($^{1}/_{32}$)
RTH	3 ($^{1}/_{8}$)

Table 1

Proper tools and methods for correcting misaligned flanges shall be applied, e.g. Equalizer™ FA4TM and FA9TE Flange Alignment Tools or similar.

When external alignment devices are used, flanges should be brought into uniform contact with the uncompressed gasket face using a maximum of 10% of the total target assembly bolt load, refer to Table 4, 6 and 8. No single bolt should be tightened above 20% of the single target bolt load.

When no external alignment devices are used, flanges should meet the alignment tolerances for PRL and GP using a maximum of 20% of the total target assembly bolt load.

7. For horizontal pipework, insert the two bottom bolts and attach nuts, so that the DeltaV-Seal™ can be centred.
8. Insert the DeltaV-Seal™ between the flanges and then insert all bolts and attach nuts.
9. Hand-tighten all bolts evenly making sure the flange faces are parallel.
10. Select a star tightening pattern in accordance with the sequence as given in Table 3 for the applicable number of bolts for any given flange. Always start the bolt-numbering on the bolt where it is widest between the flange faces (12 o'clock position). Always use a calibrated torque wrench, or another form of calibrated torque control.

ASME PCC-1 - 2022, APPENDIX 7: TABLE F-6.1.1.1-1
STAR PATTERN SEQUENCING

NO. OF BOLTS	Bolt-Numbering Sequence to Be Marked Clockwise on the Flange
4	1, 3, 2, 4
8	1, 5, 3, 7, 2, 6, 4, 8
12	1, 9, 5, 3, 11, 7, 2, 10, 6, 4, 12, 8
16	1, 9, 5, 13, 3, 11, 7, 15, 2, 10, 6, 14, 4, 12, 8, 16
20	1, 17, 9, 5, 13,3, 19, 11, 7, 15, 2, 18, 10, 6, 14, 4, 20, 12, 8, 16
24	1, 17, 9, 5, 13, 21, 3, 19, 11, 7, 15, 23, 2, 18, 10, 6, 14, 22, 4, 20, 12, 8, 16, 24

Table 2

Following the sequence numbers as marked per Table 2, tighten each bolt as described in Table 3-16. These incremental loading and tightening steps lead to the assembly target bolt load and torque as stated in Table 3-16, see also Figure 6.

Star Pattern; 24-Bolt Basic Example: (Steps 1-9): (outer numbers indicate the tightening sequence)

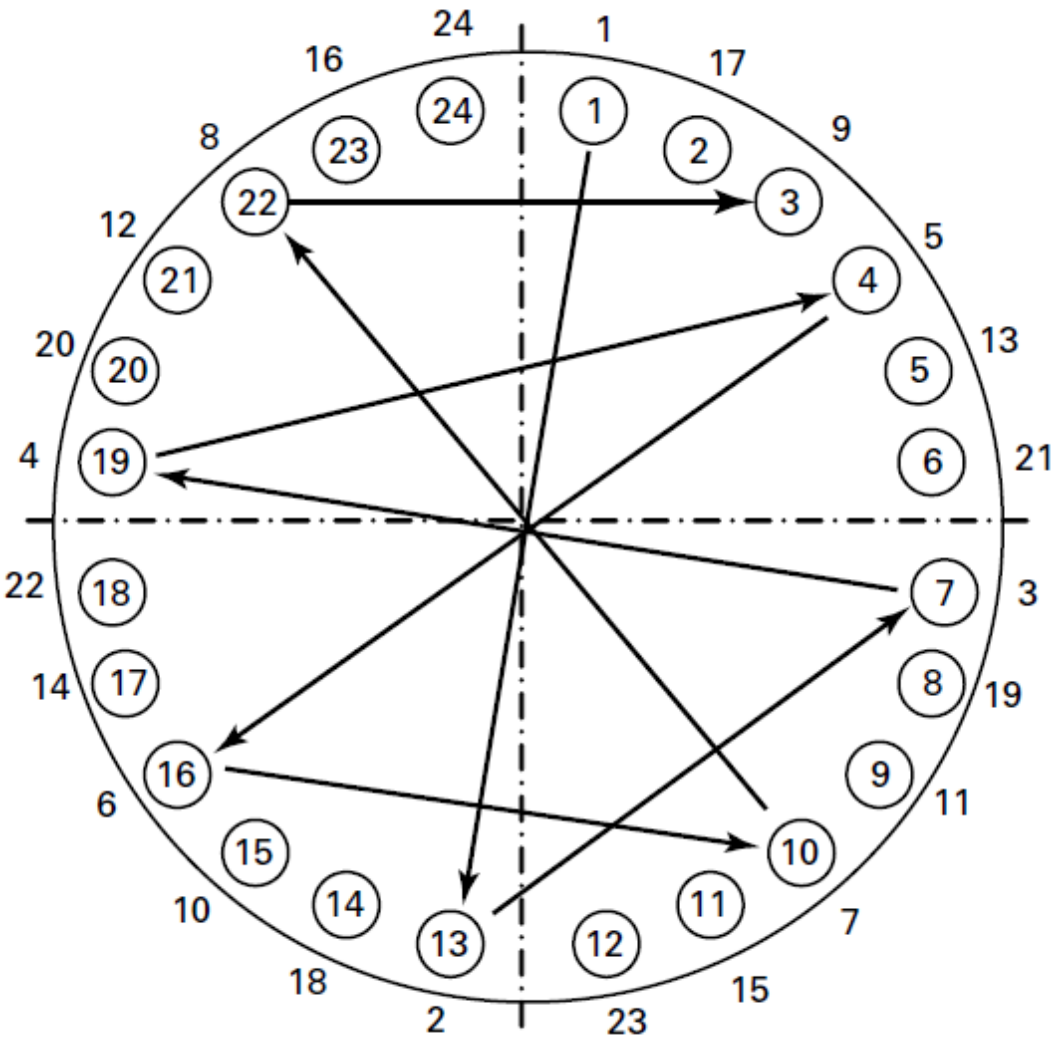

Figure 6

11. Make one last round with 100% torque going clockwise, or counter-clockwise, from bolt to bolt around the entire flange (circular tightening).

Should another form of assembly method be applied e.g., hydraulic tensioner, ensure that the listed values for total installation force ($F_{B0,Nom}$) are reached, as shown in Table 4, 6, 8, 10, 12, 14 and 16.

Table 3 – EN PN10 Torque Table

EN PN10 – Maximum operating temperature 400°C									
Nominal Diameter (mm)	**No. of Bolts**	**Type of Bolt**	**Torque [Nm]**						**Notes**
			Initial Step	**10%**	**20%**	**40%**	**80%**	**100%**	
200	8	M20 x 2.5	Hand Tighten	19	39	77	154	193	Note 1
250	12	M20 x 2.5		13	27	53	106	133	Note 1, 2
300	12	M20 x 2.5		16	33	65	130	163	Note 1, 2
350	16	M20 x 2.5		15	30	59	118	148	Note 1, 2

Table 4 – EN PN10 Installation Forces (corresponding to Table 3)

EN PN10 – Maximum operating temperature 400°C									
Nominal Diameter (mm)	**No. of Bolts**	**Type of Bolt**	**Force [kN]**						**Total inst. force FB0,Nom (kN) (100% x No. bolts)**
			Initial Step	**10%**	**20%**	**40%**	**80%**	**100%**	
200	8	M20 x 2.5	Hand Tighten	9	17	35	69	87	692
250	12	M20 x 2.5		6	12	24	48	60	716
300	12	M20 x 2.5		7	15	29	58	73	875
350	16	M20 x 2.5		7	13	27	53	66	1060

Table 5 – EN PN16 Torque Table

EN PN16 – Maximum operating temperature 400°C									
Nominal Diameter (mm)	**No. of Bolts**	**Type of Bolt**	**Torque [Nm]**						**Notes**
			Initial Step	**10%**	**20%**	**40%**	**80%**	**100%**	
200	12	M20 x 2.5	Hand Tighten	12	25	49	98	123	Note 1
250	12	M24 x 3		17	34	68	137	171	Note 1
300	12	M30 x 3.5		25	49	99	198	247	Note 1
350	16	M24 x 3		24	47	95	190	237	Note 1

Table 6 – EN PN16 Installation Forces (corresponding to Table 5)

EN PN16 – Maximum operating temperature 400°C									
Nominal Diameter (mm)	**No. of Bolts**	**Type of Bolt**	**Force [kN]**						**Total inst. force FB0,Nom (kN) (100% x No. bolts)**
			Initial Step	**10%**	**20%**	**40%**	**80%**	**100%**	
200	12	M20 x 2.5	Hand Tighten	5	11	22	44	55	658
250	12	M24 x 3		6	13	26	51	64	768
300	12	M30 x 3.5		9	18	37	74	92	1106
350	16	M24 x 3		10	20	39	79	99	1577

Table 7 – EN PN25 Torque Table

EN PN25 – Maximum operating temperature 400°C									
Nominal Diameter (mm)	**No. of Bolts**	**Type of Bolt**	**Torque [Nm]**						**Notes**
			Initial Step	**10%**	**20%**	**40%**	**80%**	**100%**	
200	12	M24 x 3	Hand Tighten	16	33	66	131	164	Note 2

Table 8 – EN PN25 Installation Forces (corresponding to Table 7)

EN PN25 – Maximum operating temperature 400°C									
Nominal Diameter (mm)	**No. of Bolts**	**Type of Bolt**	**Force [kN]**						**Total inst. force FB0,Nom (kN) (100% x No. bolts)**
			Initial Step	**10%**	**20%**	**40%**	**80%**	**100%**	
200	12	M24 x 3	Hand Tighten	6	12	24	49	61	734

Table 9 – EN PN10-40 Torque Table

EN PN10-40 – Maximum operating temperature 400°C									
Nominal Diameter (mm)	**No. of Bolts**	**Type of Bolt**	**Torque [Nm]**						**Notes**
			Initial Step	**10%**	**20%**	**40%**	**80%**	**100%**	
10	4	M12 x 1.75	Hand Tighten	3	6	12	25	31	
15	4	M12 x 1.75		3	7	13	26	33	
20	4	M12 x 1.75		4	8	17	34	42	Note 1
25	4	M12 x 1.75		5	9	18	36	45	Note 1
32	4	M16 x 2		8	15	30	60	75	
40	4	M16 x 2		8	15	31	62	77	
50	4	M16 x 2		11	21	42	84	105	Note 1, 2
65	8	M16 x 2		6	13	26	51	64	
80	8	M16 x 2		8	17	33	66	83	

Table 10 – EN PN10-40 Installation Forces (corresponding to Table 9)

EN PN10-40 – Maximum operating temperature 400°C									
Nominal Diameter (mm)	**No. of Bolts**	**Type of Bolt**	**Force [kN]**						**Total inst. force FB0,Nom (kN) (100% x No. bolts)**
			Initial Step	**10%**	**20%**	**40%**	**80%**	**100%**	
10	4	M12 x 1.75	Hand Tighten	2	5	9	18	23	91
15	4	M12 x 1.75		2	5	10	19	24	95
20	4	M12 x 1.75		3	6	12	24	30	121
25	4	M12 x 1.75		3	7	13	26	33	131
32	4	M16 x 2		4	8	17	34	42	168
40	4	M16 x 2		4	9	17	34	43	172
50	4	M16 x 2		6	12	23	47	58	233
65	8	M16 x 2		4	7	14	29	36	285
80	8	M16 x 2		5	9	18	37	46	368

Table 11 – EN PN10-16 Torque Table

EN PN10-16 – Maximum operating temperature 400°C									
Nominal Diameter (mm)	**No. of Bolts**	**Type of Bolt**	**Torque [Nm]**						**Notes**
			Initial Step	**10%**	**20%**	**40%**	**80%**	**100%**	
100	8	M16 x 2	Hand Tighten	7	14	29	58	72	Note 1
125	8	M16 x 2		9	18	36	73	91	Note 1
150	8	M20 x 2.5		14	28	56	113	141	Note 1, 2

Table 12 – EN PN10-16 Installation Forces (corresponding to Table 11)

EN PN10-16 – Maximum operating temperature 400°C									
Nominal Diameter (mm)	**No. of Bolts**	**Type of Bolt**	**Force [kN]**						**Total inst. force FB0,Nom (kN) (100% x No. bolts)**
			Initial Step	**10%**	**20%**	**40%**	**80%**	**100%**	
100	8	M16 x 2	Hand Tighten	4	8	16	32	40	322
125	8	M16 x 2		5	10	20	40	51	404
150	8	M20 x 2.5		6	13	25	51	63	505

Table 13 – EN PN25-40 Torque Table

EN PN25-40 – Maximum operating temperature 400°C									
Nominal Diameter (mm)	**No. of Bolts**	**Type of Bolt**	**Torque [Nm]**						**Notes**
			Initial Step	**10%**	**20%**	**40%**	**80%**	**100%**	
100	8	M20 x 2.5	Hand Tighten	15	30	61	122	152	Note 1
125	8	M24 x 3		21	43	85	170	213	Note 1
150	8	M24 x 3		26	52	105	210	262	Note 1

Table 14 – EN PN25-40 Installation Forces (corresponding to Table 13)

EN PN25-40 – Maximum operating temperature 400°C									
Nominal Diameter (mm)	**No. of Bolts**	**Type of Bolt**	**Force [kN]**						**Total inst. force FB0,Nom (kN) (100% x No. bolts)**
			Initial Step	**10%**	**20%**	**40%**	**80%**	**100%**	
100	8	M20 x 2.5	Hand Tighten	7	14	27	54	68	543
125	8	M24 x 3		8	16	32	64	80	637
150	8	M24 x 3		10	20	39	78	98	784

Table 15 – EN PN63-160 Torque Table

EN PN63-160 – Maximum operating temperature 400°C									
Nominal Diameter (mm)	**No. of Bolts**	**Type of Bolt**	**Force [kN]**						**Total inst. force FB0,Nom (kN) (100% x No. bolts)**
			Initial Step	**10%**	**20%**	**40%**	**80%**	**100%**	
25	4	M16 x 2	Hand Tighten	6	11	22	44	56	222

Table 16 – EN PN63-160 Installation Forces (corresponding to Table 15)

EN PN63-160 – Maximum operating temperature 400°C									
Nominal Diameter (mm)	**No. of Bolts**	**Type of Bolt**	**Torque [Nm]**						**Notes**
			Initial Step	**10%**	**20%**	**40%**	**80%**	**100%**	
25	4	M16 x 2	Hand Tighten	10	20	40	80	100	

Notes to Installation Procedure

1. Stated torque values are only applicable for A4-80 bolting. For other bolting, contact Pipeotech for custom-made torque values.
2. External forces/moments must be controlled, contact Pipeotech for custom-made torque values.
3. Torque values are only applicable to Molykote® G-Rapid Plus lubricant. For other lubricants, contact Pipeotech for custom-made torque values.
4. All torque values are calculated by $M_{t,nom} = k_B \times \frac{F_{B0nom}}{n_B}$ in accordance with EN 1591-1 equation B.4. k_B is the calculated "nut factor" from the coefficients of friction in the threads and underhead from the bolts/nuts, F_{B0nom} is the total installation force whilst n_B is the number of bolts. The F_{B0nom} - value is marked on each gasket as given in Table 4, 6, 8, 10, 12, 14 and 16 (if applicable).
5. All torque and force values in Table 3-14 are rounded off to the nearest Nm/kN.